Concern Resolution Process for In-house Manufacturing.

QC Story.

QC STORY PROJECT

To Eliminate Head Lamp to Fender Uneven Gap on Scorpio SCDC Scorpio Vehicle.

Mahindra and Mahindra Ltd, Scorpio Body Shop, Nasik Plant-1

	Plan	Actual
Start Date	**3rd April-15**	**4th April-15**
Completion Date	**30th july-15**	**08th Aug-15**

Current Status: Completed

Phase II – QC Story

- Team Information
- Step1: Select the Theme
- Step 2: Justify the choice
- Step 3: Understand the current situation
- Step 4: Select Targets
- Step 5: Analysis (Level 1 Analysis)
- Step 6: Implement corrective measures
- Step 7: Confirm the Effects
- Step 8: Standardise
- Step 9: Summarise & Plan future actions
- Guidelines to user

Cross Functional Team

Team Leader – Leads the team, Co-ordinates the meeting
Mentor - Facilitates the team for concern resolution, provides resource.
Mostly Mentor is PU Manager.
Members – Cross Functional Team

No	Description	Name	Designation	Dept	Phone	Email
1	**Team Leader**	**N.S.Hiray**	Deputy Manager	QA, SBS	9881737077	Hiray.nitin2@mahindra.com
2	**Mentor**	**Prasad Upasani**	Manager	QA, SBS	9881232185	Upasani.`Prasad@mahindra.com
3	**Member 1**	**Manoj More**	Manager	Prod. SBS	9767744812	More.Manoj@mahindra.com
4	**Member 2**	**Sushil Dwivedi**	Asst. Manager	Tooling SBS	9922971514	Dwivedi.sushil@mahindra.com
5	**Member 3**	**Ganesh Bendale**	Deputy Manager	Prod. TCF	9850848982	Bendale.Ganesh@mahindra.com

1. Select the Theme

Brief description of concern

Problem Definition : Head Lamp to Fender Uneven Gap on Scorpio SCDC Vehicle.

What: Uneven Gap observed at Fender to Headlamp, Poor aesthetic appearance.

Where: Headlamp Fitment stage in TCF.

Who: Concern Reported by Internal Customer Trim-3 Buy-off & CAI.

When: Since Feb-15.

Why: To be investigated.

How: Total 252 incidences reported in last two Month.

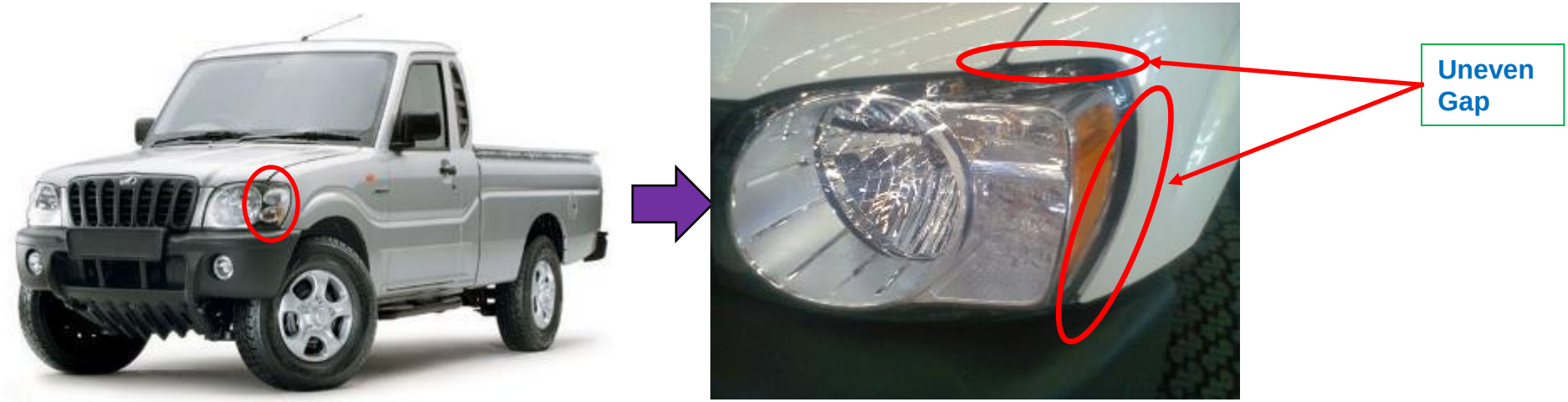

1. Select the Theme

Brief Description of Concern

- **In TCF, After Fitment of Head Lamp Lh/Rh, Uneven Gap observed between fender profile to Headlamp Edge.**

- **Emerging Concern Reported from TCF (CAI)--Issue of Head lamp to Fender Gap not ok.**

- **Major FRC Concern in TCF (Commodity-BIW}**

1. Select the Theme

Brief Description of Concern

To Eliminate Head Lamp to Fender Gap on Scorpio SCDC BIW.

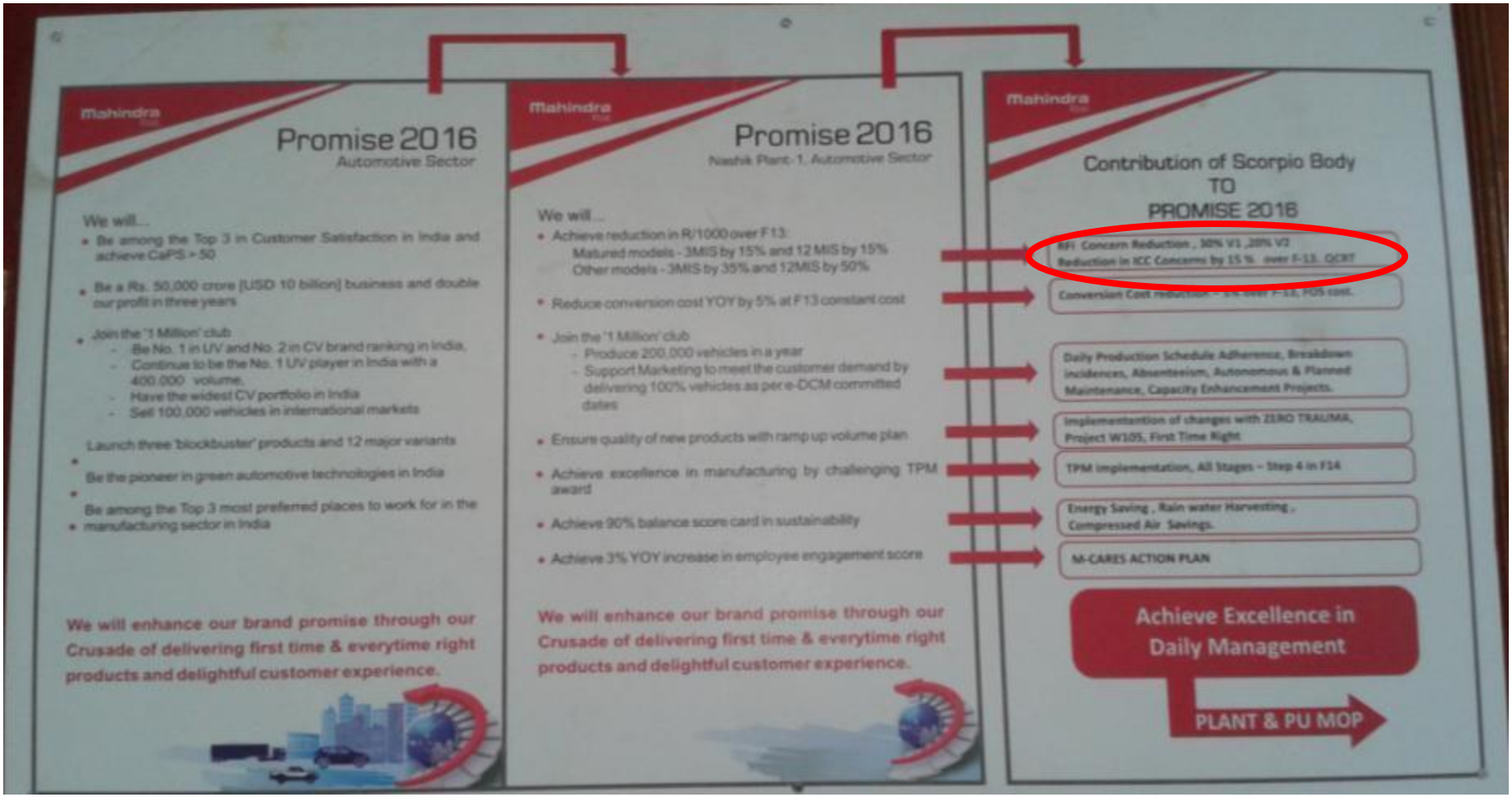

Step1. Understanding the problem

D. COPQ (Cost of Poor Quality) Calculation

Description	Feb-15	March-15
Number of pieces rejected last month (for the part number identified for study)	109	143
Number of pieces(Vehicle) reworked last month	109	143
Rework man hours Cost Including (Labor Cost+ FOS+ Electricity) in SAP.	758 ` / hr.	758 ` / hr.
Time required to rework the defect.	08 min Avg.	08 min Avg.
Total time required to rework the defects (in mins.)	872 Mins.	1144 Mins.
Total time required to rework the defects (in Hrs.)	14.53 Hrs.	19.06 Hrs.
Total rework cost(Rs.) for month	11016.27 `	14452.53 `
Extrapolated Total rework cost (Rs. for two Months) (Feb-15 to Mar-15)	25468.8 `	

2. Justify the choice (reasons)

Pareto for TCF Data (Feb-15)

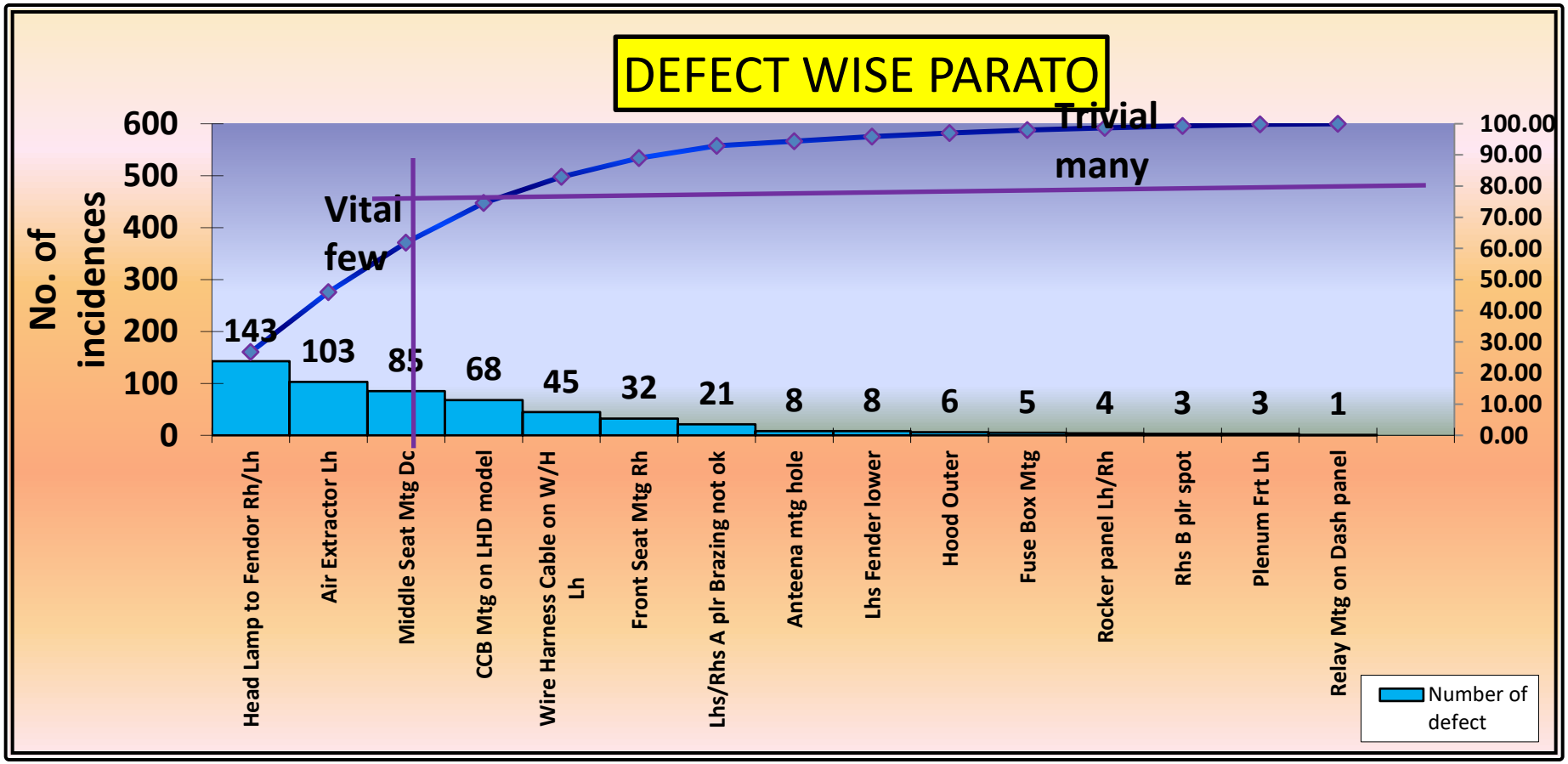

2. Justify the choice (reasons)

FRC Data from Nov-14 to March-15.

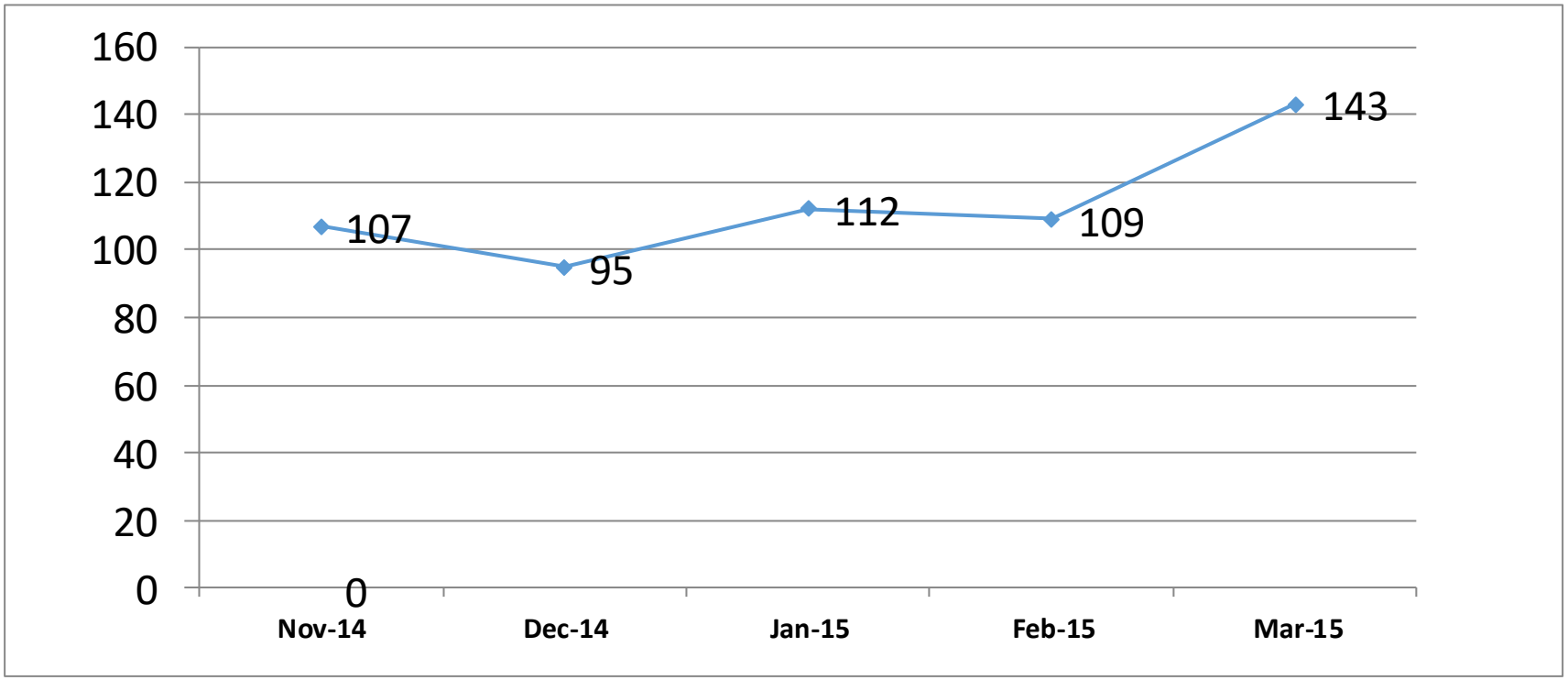

Last 5 Month Data for the Concern of Head Lamp to Fender Uneven Gap on Scorpio SCDC Vehicle.

2.a Immediate Containment Action

1) **100% Checking started in firewall Audit & Rework started in buyoff.**

2) **Strengthening the buyoff at body shop end Capitulating the specification of Below 3mm for head lamp gap.**

3. UNDERSTAND THE CURRENT SITUATION

Process Flow – Scorpio SCDC Body Shop

Note: ***Parts shaded in Yellow are Defect Generated Stage.***

3. Understand the current situation

Observation of Process of Finishing Line

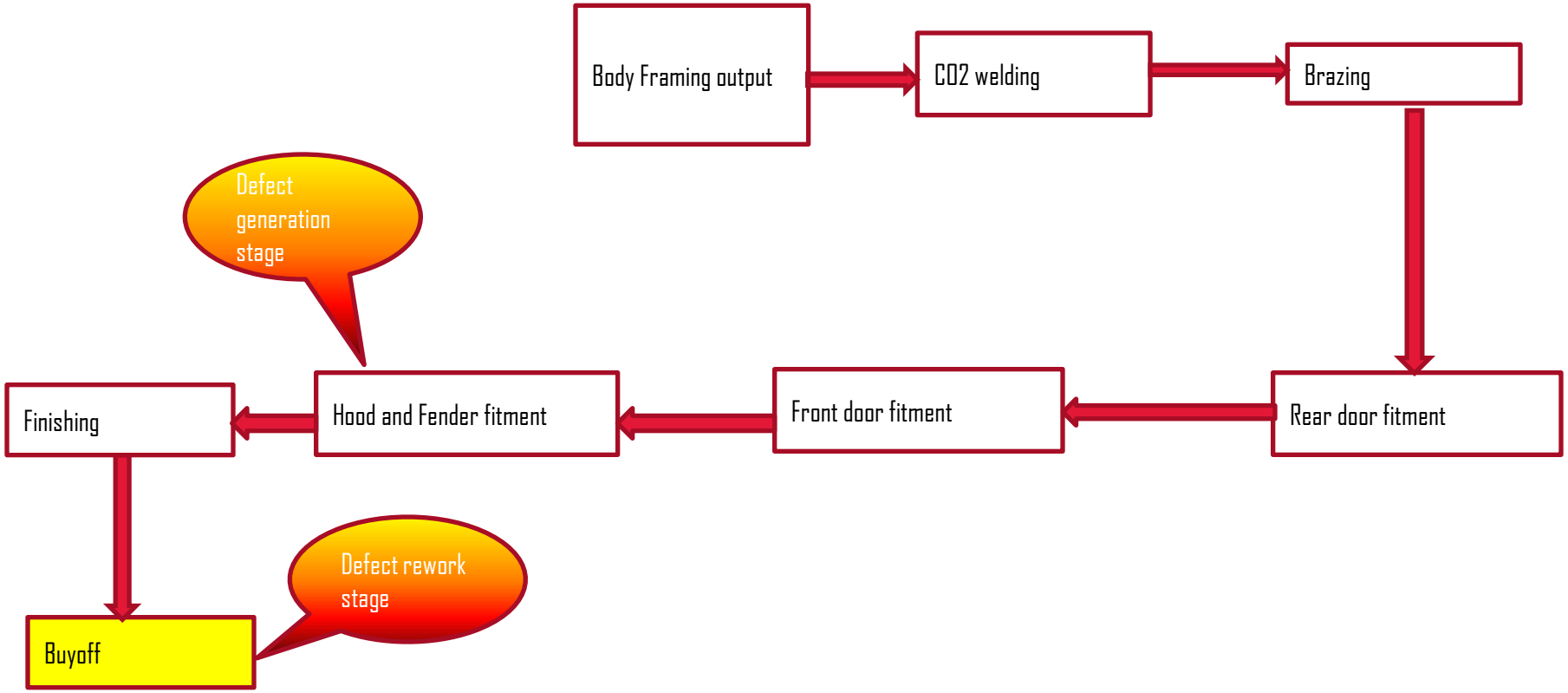

3. Understand the current situation

Defect Generated Stage
Pictorial View – Fender Fitment Stage

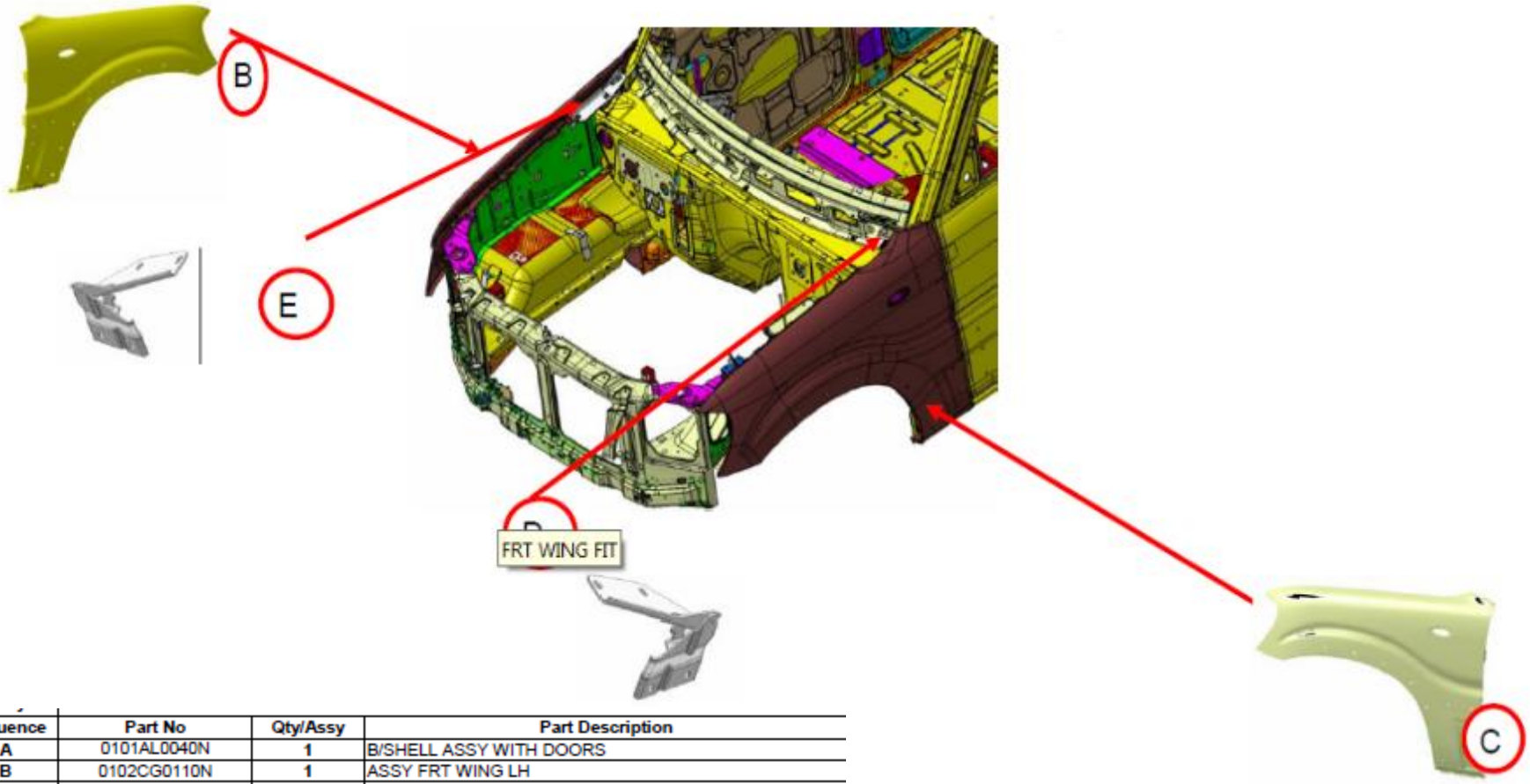

Sequence	Part No	Qty/Assy	Part Description
A	0101AL0040N	1	B/SHELL ASSY WITH DOORS
B	0102CG0110N	1	ASSY FRT WING LH
C	0102CG0100N	1	ASSY FRT WING RH
D	55060A0090N	18	HARWARE-COMBI BOLT M6
E	0102EG0110N	1	ASSY HOOD HINGE LH
F	0102EG0100N	1	ASSY HOOD HINGE RH
G	55080A0120N	4	HARDWARE -COMBI BOLT M8

3. Understand the current situation

Defect Generated Stage
Pictorial View – Hood Fitment Stage

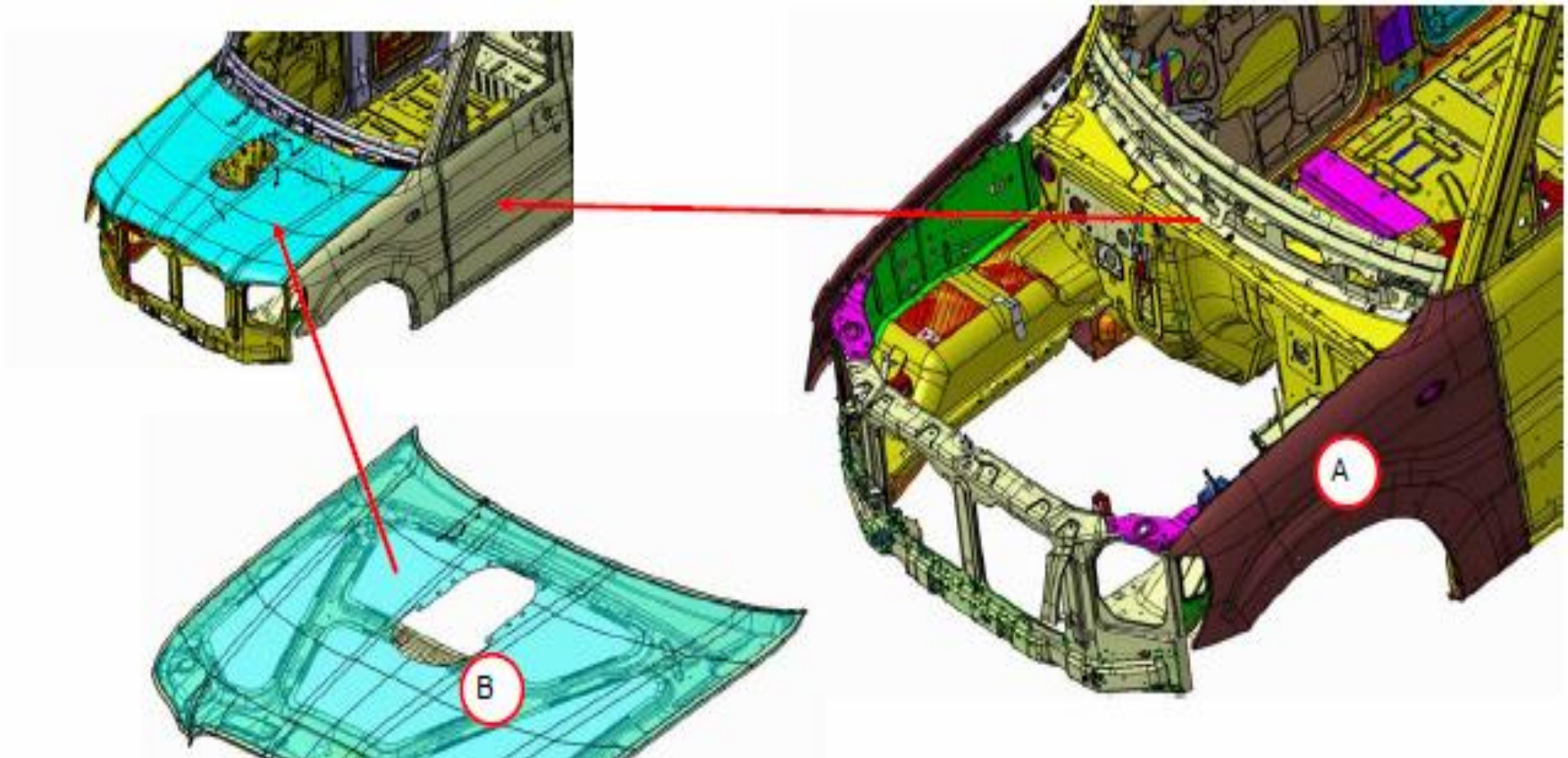

Sequence	Part No	Qty/Assy	Part Description
A	-	1	B/SHELL ASSY WITH DOORS & FRT WINGS
B	0102EAG00570N	1	ASSY HOOD COMP
C	55080A0120N	4	HARDWARE -COMBI BOLT M8

3. Understand the current situation

Data collection for Head Lamp Gap Uneven Concern Day wise in TCF.

	Dates																				
	5	6	7	8	9	10	11	12	13	14	15	16	17	18	19	20	21	22	23	24	25
Ist	6	9	8	7	7	8	7		5	8	5	7	8	5		5	7	8	6	7	6

During Data collection, we observed the following:

1) **Specification for Hood to Fendor Gap is 3 to 0 mm.**

2) **Gap found at Upper side of Specification at Bottom Profile area of Fender RH Side.**

3) Head Lamp to Fender Specification.

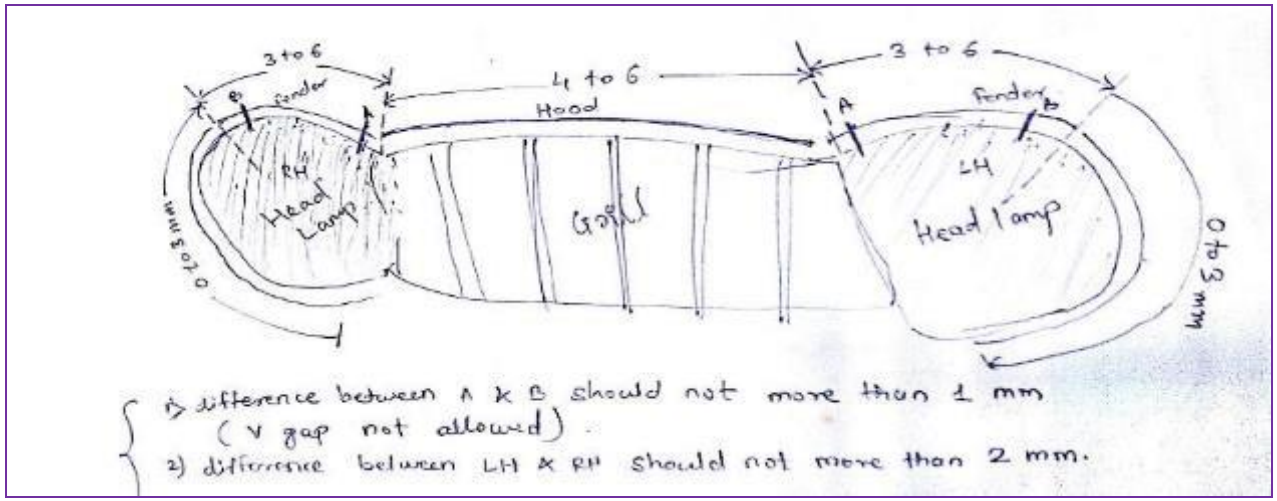

3. Understand the current situation

Head Lamp to Fender Gap Readings:-

Headlamp Gap Data								
Body no.		Point no.1	Point no.2	Point no.3	Point no.4	Point no.5	Point no.6	Point no.7
4417	LH	7	7.1	5.2	6	6.2	2.3	6.3
	RH	7.2	5.2	3	5.5	4	3.1	5
4419	LH	5.2	4	3.3	3.6	5.8	4.3	3
	RH	7	6.2	5	5.5	6.2	4	3.2
4418	LH	4.2	6.1	5	4.5	3.2	5.3	4
	RH	7.1	6	5.3	3.2	4	6	4.1
4415	LH	7	6.4	5.1	6	2.8	4.5	5
	RH	5.4	6.2	5.5	4.2	1.2	3.3	5.2
4416	LH	7.1	6.3	5.6	2.8	3	4.1	5.7
	RH	6	6	6	5	4.3	4	6.4

3. Understand the current situation

Process Walk Through – Scorpio Body Shop.

1. Hood gap is varying from Body to Body at fitment stage.
2. Operator follows the SOP in Body Shop.
3. Fender Profile found ok on Checking Fixture.
4. Hood Profile found ok on Checking Fixture

Process Walk Through –TCF (Trim-03).

1. After Head lamp Fitment, Uneven Gap Concern is observed on Stage.
2. Hood to Fender Gap found more at Bottom corner of Fender.
3. Operator follows the SOP in TCF.
4. Final inspection is carried out to verify the Head Lamp gaps and if found Not Ok, Rework was done & Head Lamp Gap is ensured.
5. Head lamp to Fender Flush found not ok on 80% BIW.
6. Fender Flushness also affect the Hood to Fendor Gap at rear corner.
7. In Many Cases, Radiator Water Supply pipe fouling while Headlamp fitment.

Quick Win Implementation :

1. **Eliminated Variation in Fender Mtg Bracket Lh/Rh Position by Correcting Gap between Resting Mylar & Fender Surface.**

Before

Gap between Resting Mylar & Fender Surface.

After

Eliminating Gap between Resting Mylar & Fender Surface.

Quick Win Implementation :

2. Eliminated Variation in Fender Assy Position Lh & Rh by Correcting Gap Between Resting Mylar & Fender Assy at Closure Stage.

Before

Gap between Resting Mylar & Fender Surface.

After

Eliminating Gap between Resting Mylar & Fender Surface.

4. Select Target

Present Level :	**Total 143 vehicles reported for the defect in March-15.**
Target :	**Zero Defect (30th July-15)**

5. Analysis

5.1 Identify possible causes:

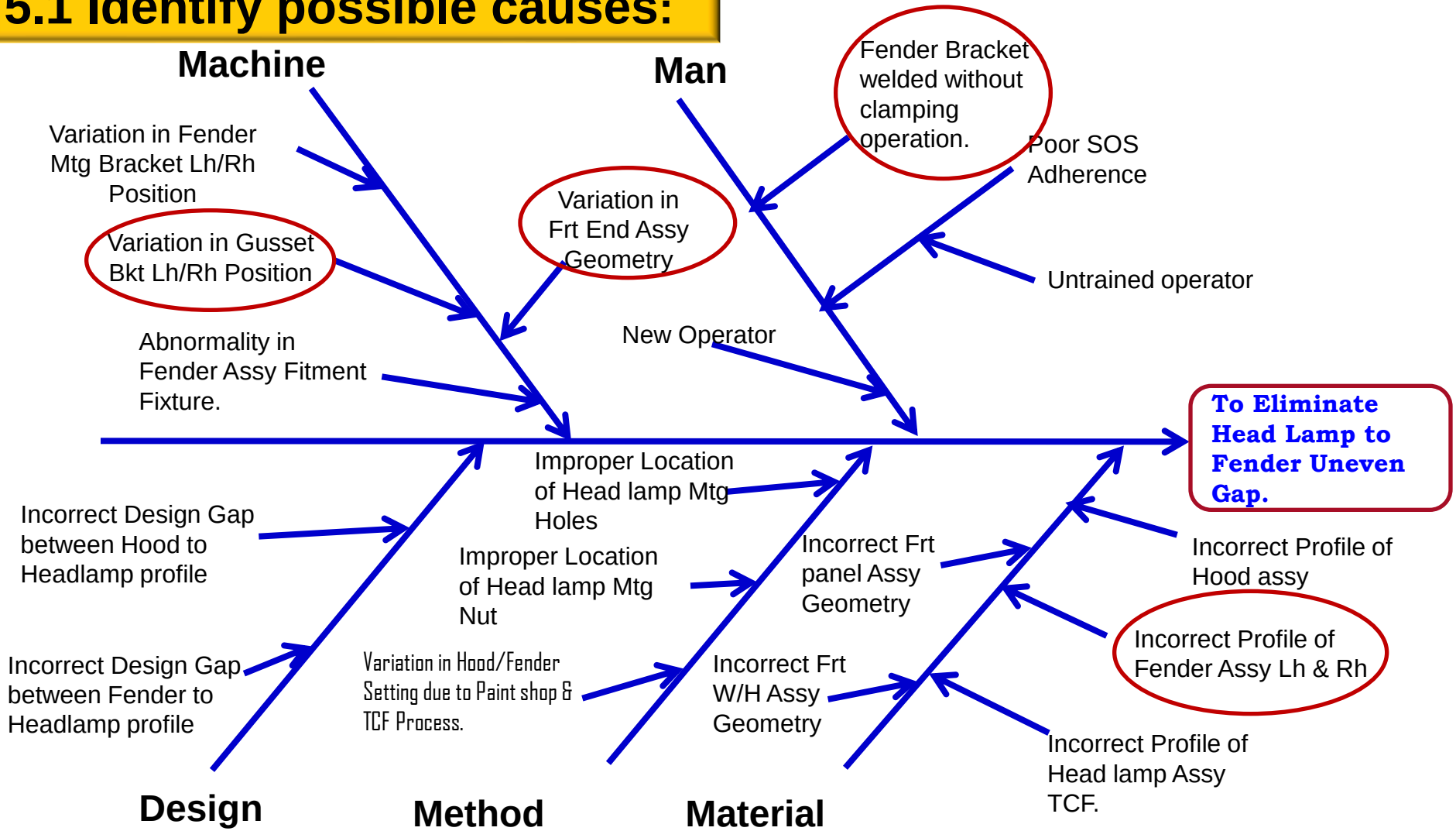

Note:- All probable causes are marked in Fishbone Diagram.

5. Analysis

List of Probable causes

Sr.no.	Probable Causes
1	Design Gap between Fender to Headlamp profile.
2	Variation in Front End Assy Geometry.
3	Incorrect Profile of Head lamp Assy TCF.
4	Variation in Gusset Bracket Lh/Rh position.
5	Incorrect Profile of Fender Assy Lh & Rh.
6	Incorrect Front Wheel house Assy Geometry.
7	Incorrect Front Panel Assy Geometry (Supplier)
8	Poor SOS Adherence for Head Lamp Fitment Lh/Rh at Trim-03.
9	Hood/Fender Setting in Paint shop & TCF Disturb.
10	Incorrect Hood outer panel Profile at Head Lamp Area.
11	Human Error- Fender Bracket welded without clamping operation.

5. Analysis

5.2 Confirm the probable cause:

No	Probable Cause	Testing and Observations	Conclusion
1.	**Design Gap between Fender to Headlamp profile.**	1. CAD Layout for Headlamp & Fender is verify in R&D. 2. Gap Between Head lamp & Fender found 3.101mm as per TCF specification.	**In Valid**

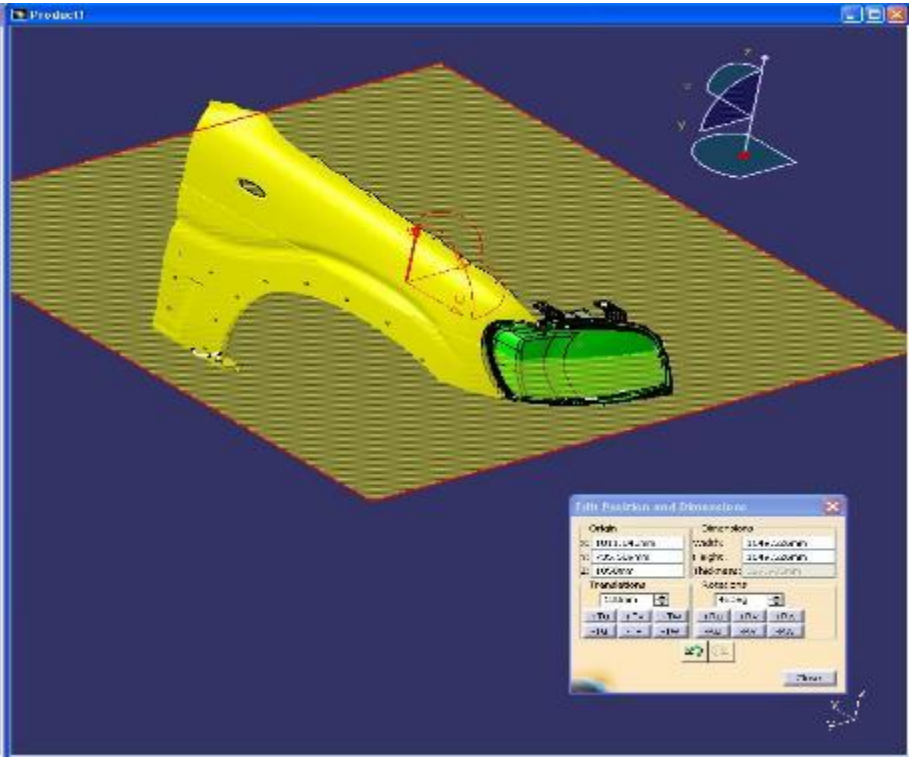

5. Analysis

5.2 Confirm the probable cause:

No	Probable Cause	Testing and Observations	Conclusion
2.	**Variation in Front End Assy Geometry.**	1) CMM inspection was done for Front End Assy {Qty-05}. 2) Front End MLP & other co ordinates Found Not Ok.	**Valid**

Double CAB CMM Report:-

Sr	DESCRIPTION OF PART	AXIS	NOMINAL	UPR TOL	LWR TOL	25/2/2015	7/03/201	01.04.201	6/04/201	7.04.201	07.05.2015
1	LOCATOR HOLE ON FRT PANEL - LH	X	494.1	1.5	-1.5	0.51	0.04	-0.52	0.11	-0.1	1.26
		Y	-418.6	1.5	-1.5	-1.21	0.13	-0.33	-0.46	-0.54	1.38
		Z	854	1.5	-1.5	1.36	2.51	2.23	2.37	2.66	[illegible]
2	LOCATOR HOLE ON FRT PANEL - RH	X	494.1	1.5	-1.5	1.43	1.32	[illegible]	[illegible]	0.93	1.5
		Y	418.6	1.5	-1.5	-2.25	-1.5	-1.5	-1.5	-1.97	0.19
		Z	854	1.5	-1.5	1.5	1.95	2.69	2.68	2.79	2.4
3	HEAD LAMP MTG BRKT INR ON FRT PNL - LH	X	516	1.5	-1.5	1.06	0.5	-0.55	0.58	0.69	1.5
		Y	-500.1	1.5	-1.5	-2.15	-0.01	-0.66	-1.5	-1.46	0.87
		Z	898	1.5	-1.5	2.01	[illegible]	1.8	3.38	[illegible]	4.34
4	HEAD LAMP MTG BRKT INR ON FRT PNL - RH	X	516	1.5	-1.5	1.26	0.91	1.27	1.49	1.48	1.08
		Y	500.1	1.5	-1.5	-1.56	0.22	-0.73	-0.26	-0.83	1.23
		Z	898	1.5	-1.5	[illegible]	1.94	2.3	2.71	2.18	[illegible]
5	HEAD LAMP MTG BRKT OTR ON FRT PNL - LH	X	587.1	1.5	-1.5	0.09	0.1	[illegible]	[illegible]	-0.3	0.87
		Y	-662.1	1.5	-1.5	-0.75	[illegible]	0.3	0.72	[illegible]	1.5
		Z	898	1.5	-1.5	[illegible]	2.14	1.45	1.5	2.04	[illegible]
6	HEAD LAMP MTG BRKT OTR ON FRT PNL - RH	X	587.1	1.5	-1.5	-0.53	0.23	0.53	1.5	1.5	0.31
		Y	662.1	1.5	-1.5	-1.73	-0.34	-1.5	-1.26	-2.27	[illegible]
		Z	898	1.5	-1.5	1.48	1.1	2.88	1.31	1.5	1.62
7	HEAD LAMP MTG BRKT INR ON GUSSET - LH	X	598.3	1.5	-1.5	1	1.46	0.12	1.5	1.5	1.5
		Y	-530	1.5	-1.5	-3.09	-1.46	-2.61	-2.07	-2.5	1.5
		Z	1143.5	1.5	-1.5	1.5	[illegible]	1.49	[illegible]	1.91	2.28
8	HEAD LAMP MTG BRKT INR ON GUSSET - RH	X	598.3	1.5	[illegible]	0.22	-0.3	0.53	1.08	0.55	0.14
		Y	-530	1.5	1.5	-1.45	-0.52	-1.46	-1.5	-1.46	1
		Z	1143.5	1.5	[illegible]	1.49	1.86	2.67	2.36	2.78	2.38
9	HEAD LAMP MTG BRKT OTR ON GUSSET - LH	X	656.5	1.5	-1.5	0.55	[illegible]	-0.58	1.45	1.43	0.75
		Y	-660	1.5	-1.5	-2.86	-1.32	-2.67	-1.44	-2.17	0.95
		Z	1143.5	1.5	-1.5	2.64	2.16	1.95	2.32	2.89	4.21
10	HEAD LAMP MTG BRKT OTR ON GUSSET - RH	X	656.5	1.5	-1.5	[illegible]	-0.59	-0.56	0.14	-0.3	-1.35
		Y	-660	1.5	-1.5	-0.63	-0.81	-1.43	-1.5	-2.03	[illegible]
		Z	1143.5	1.5	-1.5	2.59	2.95	3.52	3.18	3.5	3.11

5. Analysis

5.2 Confirm the probable cause:

No	Probable Cause	Testing and Observations	Conclusion
3	**Incorrect Profile of Head lamp Assy (TCF).**	Head lamp Profile inspection done on Checking Fixture. Profile Gap found with in specification.	**In-valid**

LUMAX AUTOMOTIVE PARTS

PART GAP DATA REPORT

FORMAT NO :-	CHI.QAD.F.19
REV. NO. / DATE :	00/
ISSUE NO. / DATE :	[illegible]
PAGE NO.	01 OF 01

CUSTOMER NAME: M&M

PART DESCRIPTION: SCORPIO REFERSH HL LH

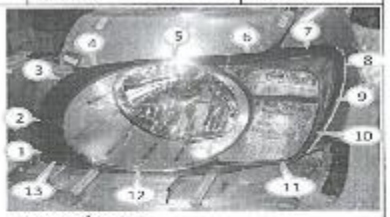

Date 23/10/15

GAP DATA :-

Sr. No.	POINTS LOCATION	SPECIFICATION	CHECKING METHOD	1	2	3	4	5					
1	1	3.5 ±1.2	TAPER SCALE	4.0	3.9	4.1	3.8	3.9					
2	2	3.5 ±1.2	TAPER SCALE	3.8	4.0	3.9	3.7	3.8					
3	3	3.5 ±1.2	TAPER SCALE	4.1	4.0	3.8	4.0	4.1					
4	4	3.5 ±1.2	TAPER SCALE	3.6	4.1	3.9	3.8	3.7					
5	5	3.5 ±1.2	TAPER SCALE	3.7	4.0	3.8	3.6	3.5					
6	6	3.5 ±1.2	TAPER SCALE	3.8	3.9	3.7	3.8	3.9					
7	7	3.5 ±1.2	TAPER SCALE	3.7	3.8	3.9	3.8	3.6					
8	8	5.5 ±1.2	TAPER SCALE	4.5	4.8	4.7	4.6	4.8					
9	9	5.5 ±1.2	TAPER SCALE	4.4	4.5	4.4	4.5	4.7					
10	10	5.5 ±1.2	TAPER SCALE	4.7	4.4	4.6	4.7	4.6					
11	11	3.5 ±1.2	TAPER SCALE	2.7	2.9	3.0	3.2	2.9					
12	12	3.5 ±1.2	TAPER SCALE	3.0	3.1	2.9	3.1	3.2					
13	13	3.5 ±1.2	TAPER SCALE	3.5	3.2	3.2	3.0	3.1					

PREPARED BY: ANANT JANBHAR

5.2 Confirm the probable cause:

No	Probable Cause	Testing and Observations	Conclusion
4	**Variation in Gusset Bracket Lh/Rh position.**	1. CMM of 05 BIW was done for Gusset Position. 2. Variation observed from 1.8 to 4.8mm in Z Direction. **(Specs. 3.0 ± 1.0mm)**	**Valid**

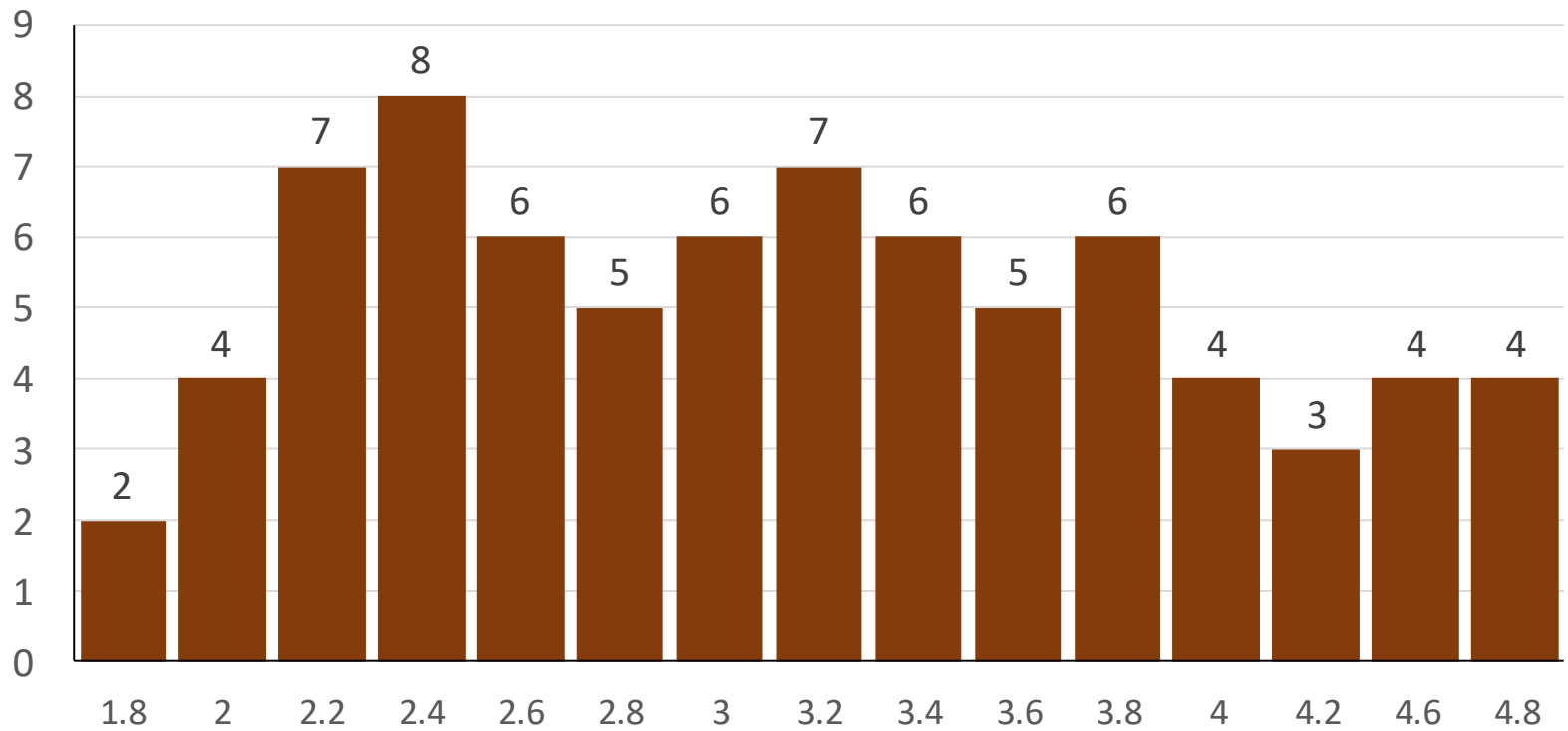

5. Analysis

5.2 Confirm the probable cause:

No	Probable Cause	Testing and Observations	Conclusion
5	Incorrect Profile of Fender Assy Lh & Rh.	Fender Panel Inspection done on Checking Fixture. Fender Profile found Not ok at point no 16,17,18 & 01.	Valid

S-FRONT WING RH/LH

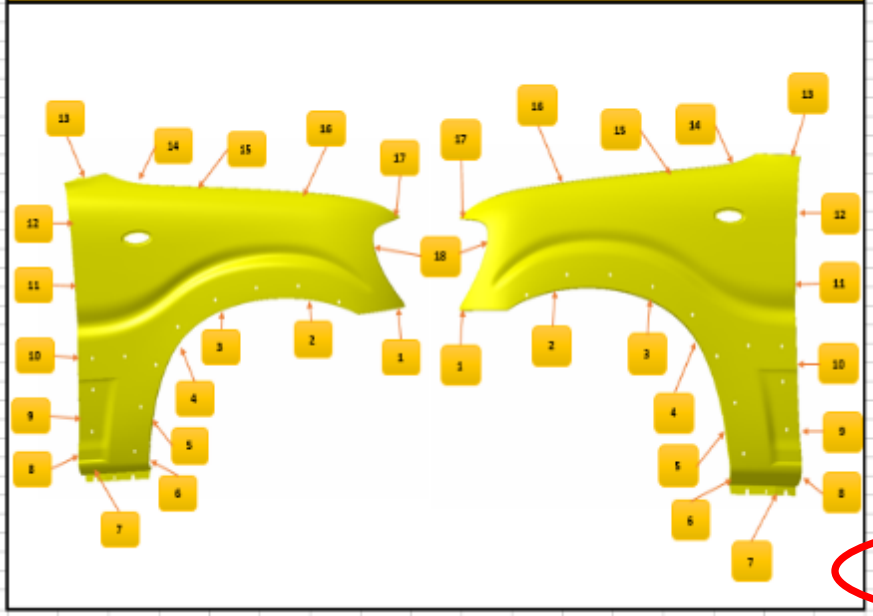

S-FRONT WING RH

Sr.No	Point No	Gap
1	1	0.4
2	2	0.5
3	3	0.5
4	4	-0.5
5	5	-0.6
6	6	-0.5
7	7	-0.3
8	8	0.2
9	9	0.5
10	10	0.4
11	11	0.3
12	12	0.5
13	13	-0.5
14	14	-0.9
15	15	-0.2
16	16	1.1
17	17	1.2
18	18	1.8

S-FRONT WING LH

Sr.No	Point No	Gap
1	1	-0.2
2	2	0.5
3	3	0.4
4	4	-0.5
5	5	-1
6	6	-0.5
7	7	0.5
8	8	0.8
9	9	1
10	10	1.5
11	11	0.5
12	12	1
13	13	0
14	14	-0.5
15	15	-0.5
16	16	1.3
17	17	1.2
18	18	1.4

5. Analysis

5.2 Confirm the probable cause:

No	Probable Cause	Testing and Observations	Conclusion
6	**Incorrect Front Wheel house Assy Geometry.**	Front Wheel House Assy Lh & Rh Check on Checking Fixture. Front Wheel House Assy Lh & Rh found ok.	**In-valid**

Wheel House Rh

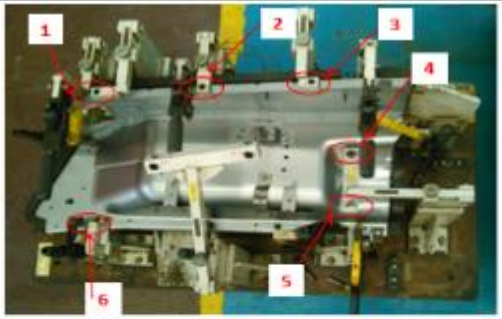

Pin No.	Assy-01	Assy-02	Assy-03	Assy-04	Assy-05	Assy-06
1	Ok	Ok	Ok	Ok	Ok	Ok
2	Ok	Ok	Ok	Ok	Ok	Ok
3	Ok	Ok	Ok	Ok	Ok	Ok
4	Ok	Ok	Ok	Ok	Ok	Ok
5	Ok	Ok	Ok	Ok	Ok	Ok
6	Ok	Ok	Ok	Ok	Ok	Ok

Wheel House Lh

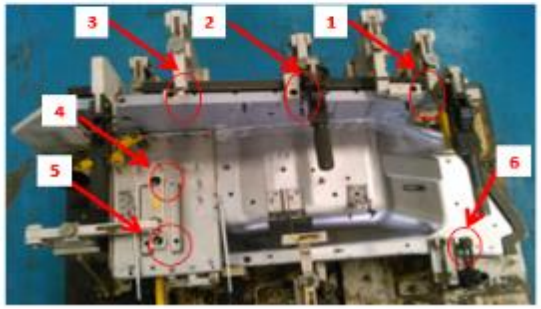

Pin No.	Assy-01	Assy-02	Assy-03	Assy-04	Assy-05	Assy-06
1	Ok	Ok	Ok	Ok	Ok	Ok
2	Ok	Ok	Ok	Ok	Ok	Ok
3	Ok	Ok	Ok	Ok	Ok	Ok
4	Ok	Ok	Ok	Ok	Ok	Ok
5	Ok	Ok	Ok	Ok	Ok	Ok
6	Ok	Ok	Ok	Ok	Ok	Ok

5. Analysis

5.2 Confirm the probable cause:

No	Probable Cause	Testing and Observations	Conclusion
7	**Incorrect Front Panel Assy Geometry (Supplier)**	1. Front panel inspection done for Head lamp Mtg co-ordinates. 2. Inspection report found ok.	**In-valid**

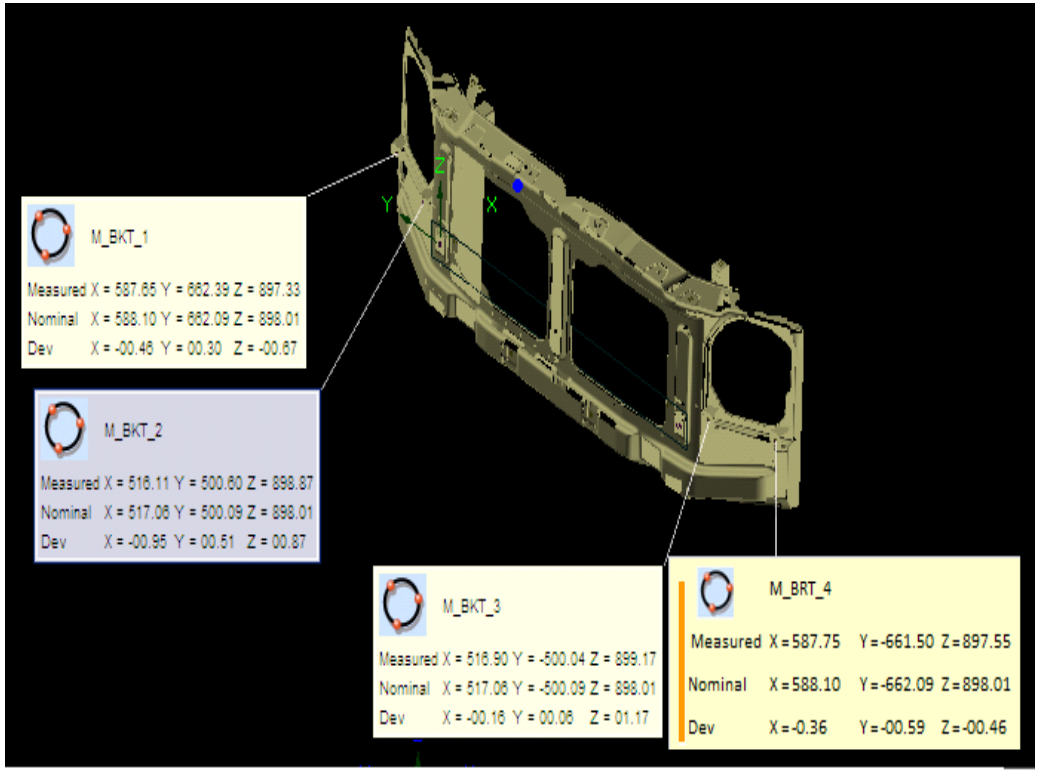

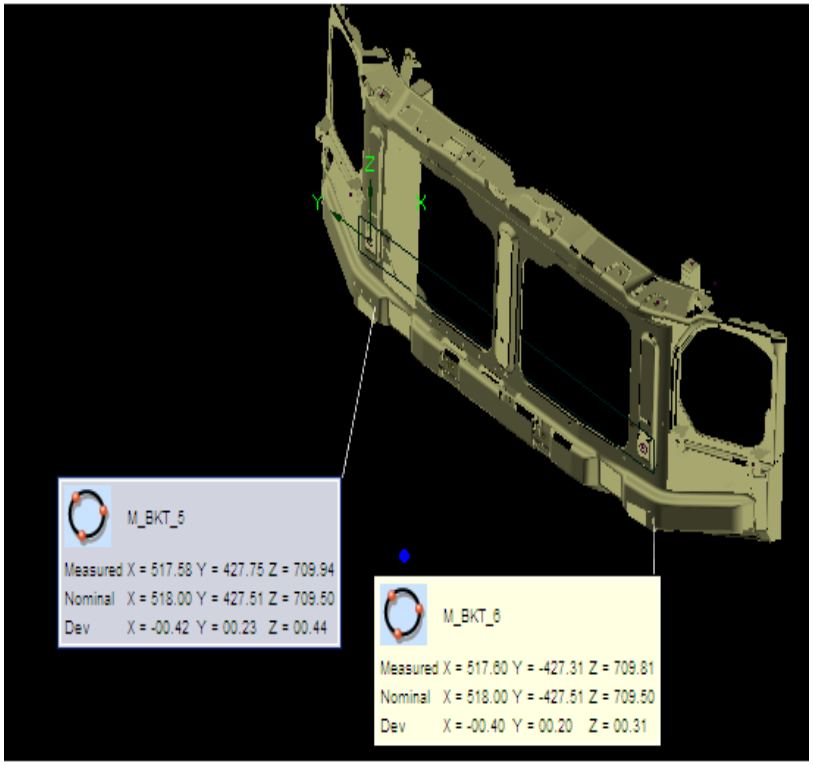

5. Analysis

5.2 Confirm the probable cause:

No	Probable Cause	Testing and Observations	Conclusion
8	**Poor SOS Adherence for Head Lamp Fitment Lh/Rh at Trim-03.**	1. 20 Cycles are Verify at Head lamp Fitment stage. 2. Associates are following SOS i.e. Head lamp Mtg nut Fitment Sequence.	**In-valid**

Sr. No	BIW No	YES/No
1	PE04757	Yes
2	PE04758	Yes
3	PE04759	Yes
4	PE04760	Yes
5	PE04761	Yes
6	PE04762	Yes
7	PE04763	Yes
8	PE04764	Yes
9	PE04765	Yes
10	PE04766	Yes
11	PE04767	Yes
12	PE04768	Yes
13	PE04769	Yes
14	PE04770	Yes
15	PE04771	Yes
16	PE04772	Yes
17	PE04773	Yes
18	PE04774	Yes
19	PE04775	Yes
20	PE04776	Yes

5. Analysis

5.2 Confirm the probable cause:

No	Probable Cause	Testing and Observations	Conclusion
9.	**Variation in Hood/Fender Setting due to Paint shop & TCF Process.**	1) Total 65 Vehicle observed in Paint shop & TCF for Hood to Fendor Gap at rear Corner. 2) Hood Gap Readings found within specification i.e.4± 1mm.	**In Valid**

Hood to Fendor Gap Readings

Sr. No	BIW No	Body Shop	Paint Shop	TCF
1	PE03591	4.2	4	4.4
2	PE03592	4.5	4.3	4.7
3	PE03593	4.6	4.4	4.8
4	PE03594	5	4.8	5.2
5	PE03595	4.3	4.1	4.5
6	PE03596	4.2	4	4.4
7	PE03597	5	4.8	5.2
8	PE03766	4.9	4.7	5.1
9	PE03767	4.7	4.5	4.9
10	PE03768	4.8	4.6	5
11	PE03769	4.6	4.4	4.8
12	PE03770	4.5	4.3	4.7
13	PE03771	4.7	4.5	4.9
14	PE03772	4.9	5.1	5.5
15	PE03773	4.5	4.7	5.1
16	PE03774	4.1	4.3	4.7
17	PE03775	4.6	4.8	5.2
18	PE03776	4.5	4.7	5.1
19	PE03777	5.1	5.3	5.7
20	PE03778	4.3	4.5	4.9
21	PE03779	5.2	5.4	5.8
22	PE03780	4.8	5	4.6
23	PE03781	5.3	5.5	5.1
24	PE03782	4.8	5	4.6
25	PE03783	5.1	5.3	4.9
26	PE03784	5.8	6	5.6
27	PE03785	4.6	4.8	4.4
28	PE03786	4.8	5	4.6
29	PE03787	4.7	4.9	4.5
30	PE03788	5.6	5.8	5.4

Hood to Fendor Gap Readings

Sr. No	BIW No	Body Shop	Paint Shop	TCF
1	PE03603	4.6	4.5	4.9
2	PE03604	4.7	4.6	5
3	PE03605	4.8	4.4	4.8
4	PE03606	4.6	4.6	5
5	PE03607	4.8	4	4.4
6	PE03608	4.2	3.9	4.3
7	PE03609	4.1	3.8	4.2
8	PE03610	4	3.8	4.2
9	PE03611	4	4	4.4
10	PE03612	4.2	4.4	4.8
11	PE03613	4.6	4.6	5
12	PE03614	4.8	4.7	5.1
13	PE03615	4.9	5	5.4
14	PE03616	4.8	5.3	5.7
15	PE03617	5.1	5	5.4
16	PE03618	4.8	5.4	5.8
17	PE03619	5.2	5.9	6.3
18	PE03620	5.7	5.3	5.7
19	PE03621	5.1	4.4	4.8
20	PE03622	4.2	4.5	4.9
21	PE03623	4.3	5.4	5
22	PE03624	5.2	5	4.6
23	PE03625	4.8	5.1	4.7
24	PE03626	4.9	4.8	4.4
25	PE03627	4.6	5	4.6
26	PE03628	4.8	5.1	4.7
27	PE03629	4.9	5	4.6
28	PE03630	4.8	4.8	4.4
29	PE03631	4.6	5.1	4.7
30	PE03632	4.9	5.2	5.6

5. Analysis

5.2 Confirm the probable cause:

No	Probable Cause	Testing and Observations	Conclusion
10.	**Incorrect Hood outer panel Profile at Head Lamp Area.**	1) 10 Hood Outer panel checked on checking panel. 2) Total 05 Assys found ok. (Specs. 0.5± 0.4mm)	**In-valid**

HOOD OTR PANEL REPORT

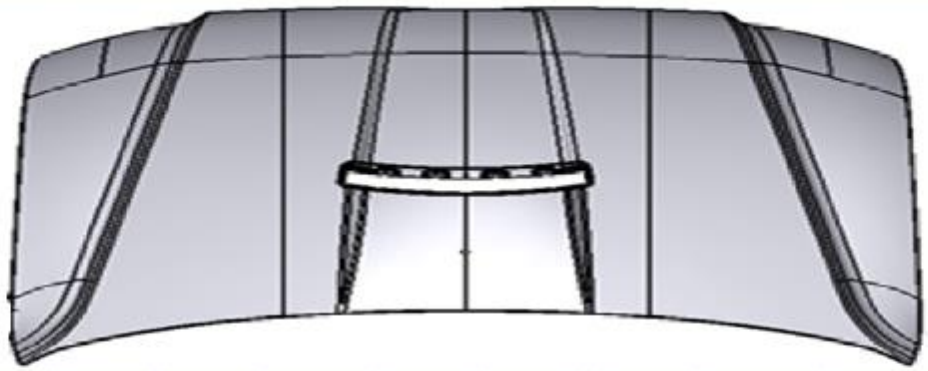

POINT	RH									
	Panel-01	Panel-02	Panel-03	Panel-04	Panel-05	Panel-06	Panel-07	Panel-08	Panel-09	Panel-10
A	1.0	0.5	0.6	0.5	0.5	0.5	0.7	1.0	0.5	0.5
B	0.3	0.6	0.3	0.6	0.7	0.6	0.3	0.6	1.0	0.6
C	0.7	0.3	0.6	0.7	0.6	0.3	1.0	0.3	0.6	0.3
D	0.6	0.6	0.3	0.3	0.3	0.6	0.6	0.6	0.3	0.6
E	0.3	0.7	0.3	0.7	0.3	0.7	0.3	0.7	0.7	0.7

POINT	LH									
	Panel-01	Panel-02	Panel-03	Panel-04	Panel-05	Panel-06	Panel-07	Panel-08	Panel-09	Panel-10
A	0.6	0.6	0.3	0.6	0.6	0.6	0.6	0.6	0.3	0.3
B	0.3	1.0	0.6	1.0	0.3	0.3	1.0	0.3	0.6	0.7
C	0.7	0.5	0.5	0.5	0.7	0.7	0.5	1.0	0.5	1.0
D	1.0	0.3	0.3	0.3	0.6	0.6	0.3	0.6	0.3	0.6
E	0.3	0.7	0.6	0.7	1.0	0.3	0.7	1.0	0.6	0.3

5. Analysis

5.2 Confirm the probable cause:

No	Probable Cause	Testing and Observations	Conclusion
11	**Fender Bracket welded without clamping operation.**	1. Total 35 Fender Assy Check for Bracket Welding operation at Fender Assy Fixture. 2. 06 Assy observed not ok for Fender Bracket welded without clamping operation. 3. Bracket Variation for Not ok Assays up to 2.7mm.	**Valid**

	Assy-01	Assy-02	Assy-03	Assy-04	Assy-05	Assy-06	Assy-07	Assy-08	Assy-09	Assy-10	Assy-11	Assy-12	Assy-13	Assy-14	Assy-15	Assy-16	Assy-17	Assy-18	Assy-19	Assy-20
Fixture Located in Body	√	√	√	√	√	√	√	√	√	√	×	√	√	√	√	×	√	√	√	√

	Assy-21	Assy-22	Assy-23	Assy-24	Assy-25	Assy-26	Assy-27	Assy-28	Assy-29	Assy-30	Assy-31	Assy-32	Assy-33	Assy-34	Assy-35
Fixture Located in Body	√	√	×	√	√	√	√	√	×	√	√	√	×	√	√

WHY - WHY Analysis

5.3 Identify the Root Causes:

Sr No	Probable cause	why	why	why	why
1	Variation in Front End Geometry.	Front End Welding Fixture not ok.	Improper locating & clamping of Frt Panel Assy & Front Wheel house assy.	Locating pins & resting mylers position not ok.	Frt End Welding Fixture Cad layout not ok & Front panel bottom Clamp Broken.
2	Variation in Gusset Bracket Lh/Rh position.	Gusset Fitment Unit not ok at Underbody#10.	Improper Resting in Z-direction for Gusset on Front End assy.	Only Single Myler Resting for Gusset Rh/Lh.	Poor Fixture design of Gusset.
3	Incorrect Profile of Fender Assy Lh & Rh.	Fender Assy profile not ok.	Fender Assy twisted while Clamping in Welding Fixture.	Excess Clamping by Nylon Block in Fender Welding Fixture.	Poor Design of Nylon Block on Fender Welding Fixture.

WHY - WHY Analysis

5.3 Identify the root causes:

Sr No	Probable cause	why	why	why	why
4	Fender Bracket welded without clamping operation.	Associate Forget to fender bracket clamping operation.	Monotonous operation for Spot Welding at Fender assy.	Associate Error.	No Human Error Profing.

6. Implement the corrective measures

Sr No	Root Causes	Action plan	Target Date	Status
1	Frt End Welding Fixture Cad layout not ok & Front panel bottom Clamp Broken.	1. FARO-ARM CMM Inspection done for Front End Welding Fixture. 2. Total 12 Mylers & 06 Locating pin found not ok. 3. Broken Clamp unit Repaired for proper holding.	20.06.15	Completed

FARO CONTROL STATION

OPERATOR : Sanjay
ASSY STN#10 {SC/DC}
DATE: May 14 2015
UNIT : Milimeter

FARO CAM2

M_LH_WHEEL_HOUSE_FRT_LOC_PIN *(Measured Circle , number of points 4)*

		Measured	Nominal	+Tol	-Tol	Dev	Out of Tol
	X	0632.874	0635.000	0000.500	-0000.500	-0002.126	-0001.626
	Y	-0440.623	-0440.000	0000.500	-0000.500	-0000.623	-0000.123
Center	Z	0450.000	0450.000	0000.500	-0000.500	0000.000	*******

M_LH_WHEEL_HOUSE_RR_LOC_PIN *(Measured Circle , number of points 4)*

		Measured	Nominal	+Tol	-Tol	Dev	Out of Tol
	X	1102.390	1105.000	0000.500	-0000.500	-0002.610	-0002.110
	Y	-0435.167	-0436.000	0000.500	-0000.500	0000.833	0000.333
Center	Z	0450.000	0450.000	0000.500	-0000.500	0000.000	*******

M_RH_WHEEL_HOUSE_FRT_LOC_PIN *(Measured Circle , number of points 4)*

		Measured	Nominal	+Tol	-Tol	Dev	Out of Tol
	X	0634.390	0635.000	0000.500	-0000.500	-0000.610	-0000.110
	Y	0439.565	0440.000	0000.500	-0000.500	-0000.435	*******
Center	Z	0450.000	0450.000	0000.500	-0000.500	0000.000	*******

M_RH_WHEEL_HOUSE_RR_LOC_PIN *(Measured Circle , number of points 4)*

		Measured	Nominal	+Tol	-Tol	Dev	Out of Tol
	X	1104.654	1105.000	0000.500	-0000.500	-0000.346	*******
	Y	0436.896	0436.000	0000.500	-0000.500	0000.896	0000.396
Center	Z	0450.000	0450.000	0000.500	-0000.500	0000.000	*******

M_LH_FRT_END_PIN *(Measured Circle , number of points 4)*

		Measured	Nominal	+Tol	-Tol	Dev	Out of Tol
	X	0476.000	0476.000	0000.500	-0000.500	0000.000	*******
	Y	-0416.745	-0418.600	0000.500	-0000.500	0001.855	0001.355
Center	Z	0854.425	0854.000	0000.500	-0000.500	0000.425	*******

Broken Clamp unit Repaired.

6. Implement the corrective measures

Sr No	Root Causes	Action plan	Target Date	Status
2	Poor Fixture Design of Gusset at Underbody Stn#10.	Additional Mechanical Stopper provided on Gusset to eliminate Variation in Z-Direction.	05.05.15	Completed

Before

Poor Fixture Design for Holding Gusset in Z-direction..

After

Additional Mechanical Stopper provided on Gusset to eliminate Variation in Z-Direction.

6. Implement the corrective measures

Sr No	Root Causes	Action plan	Target Date	Status
3	Poor Design of Nylon Block in Fender Welding Fixture.	New Nylon Resting Block installed on Fender Assy Welding Fixture to eliminate Assy Twisting Effect.	15.07.15	Completed

Before

Gap between Resting Mylar & Fender Surface.

After

Gap between Resting Mylar & Fender Surface.

6. Implement the corrective measures

Sr No	Root Causes	Action plan	Target Date	Status
4	Associate Error- Fender Bracket welded without clamping operation.	1. Pneumatic interlocking provided with spot Welding Gun. 2. Without Bracket Spot Welding operation will not execute by Associate.	11.06.15	Completed

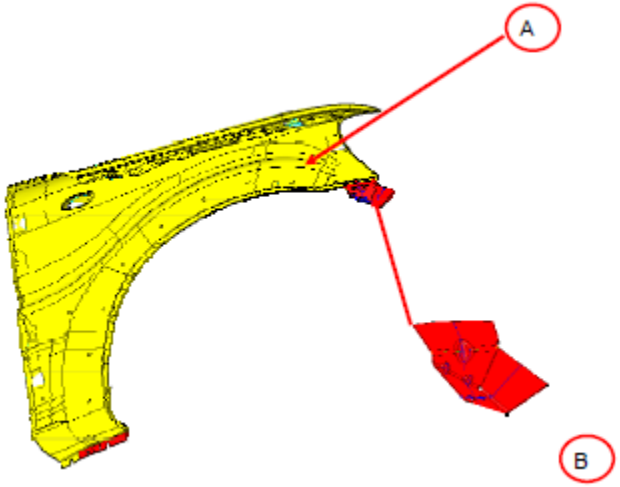

Sequence	Part No	Qty/Assy	Part Description
A	0102CG0050N	1	PNL WING FRONT LH HS
B	0102CG0190N	1	BRKT FRT WING FRT LH

Fender Bracket interlocking with Spot Welding Gun.

7. Check & confirm the results & effects

7.1 Verify Results:

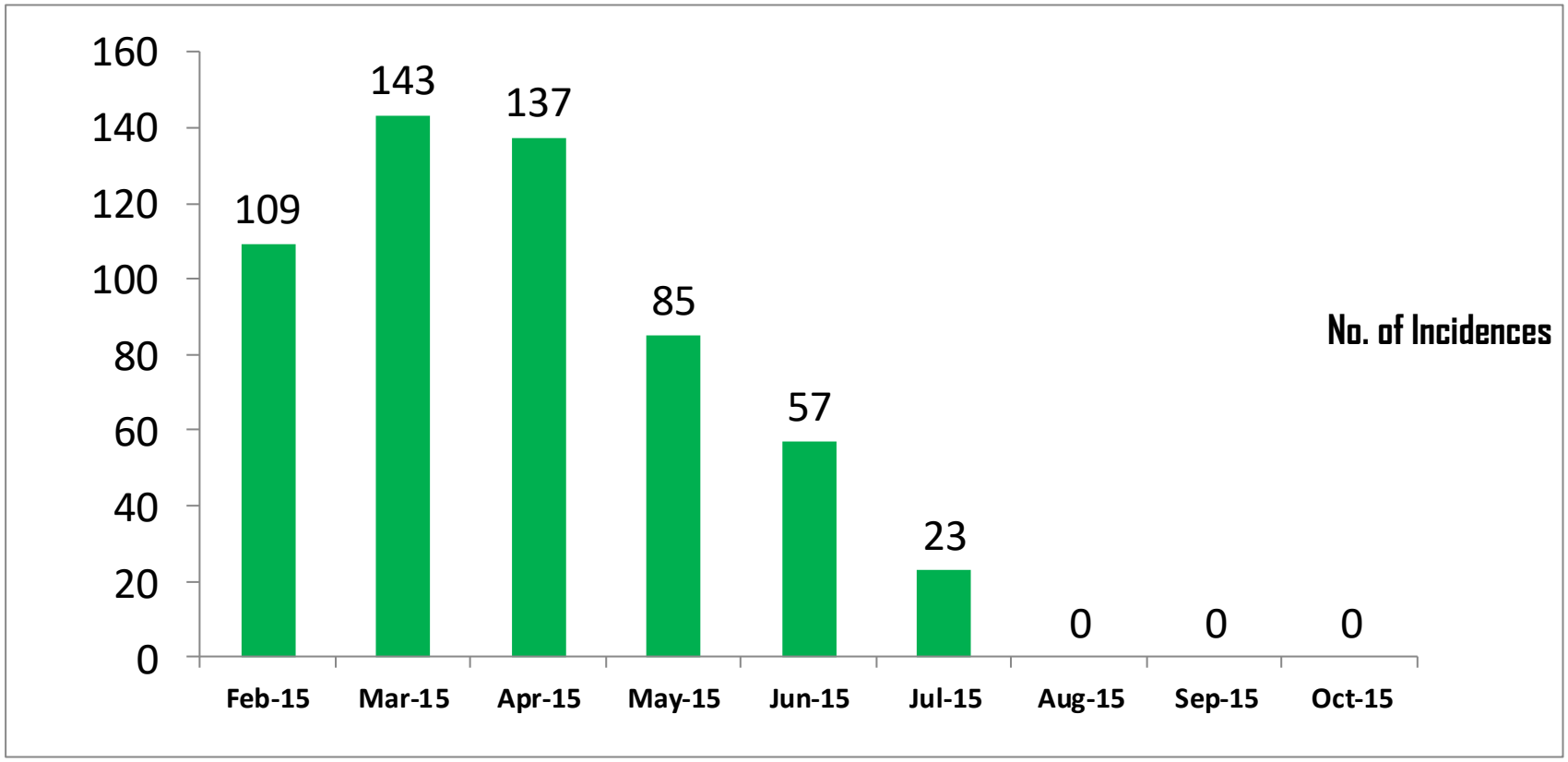

7.2 Full Scale Implementation plan:

W In-house Action :-

1. (Date:-)
2. . (Date:-)
3. (Date:- 05.05.15)
4. (Date:- 15.07.15)
5. (Date:- 15.06.15)
6. (Date:-20.05.2015)
7. Sushil – (Date:-26.05.2015)
8. (Date:-25.05.15)

7. Check & confirm the results & effects

7.2 Full Scale Implementation plan:

	Activity	Target Dt	Resp.	Status
1	Front End Fixture Assy Locating pins & Mylers Correction done as per CMM report.	20.06.15	Sushil/Nitin	Closed
2	Fender Assy Fixture Corrected by Shimming in Resting mylers to improve repeatability.	16.04.15	Sushil/Nitin	Closed
3	Additional Mechanical Stopper provided on Gusset Rh & Lh to eliminate Variation in Z-Direction.	05.05.15	Manoj	Closed
4	Nylon Block Dimension corrected to avoid Assy twisting while spot welding.	15.07.15	Sushil/Nitin	Closed
5	Pneumatic interlocking provided with spot Welding Gun. Without Bracket Spot Welding operation will not execute by Associate.	15.06.15	Prasad/Vivek	Closed
6	Fixture History card of Frt End Assy Fixture has updated.	20.05.15	Sushil	Closed
7	Fixture History card of Fender Assy & Fender Fitment Fixture has updated.	26.05.15	Sushil	Closed
8	OPL Given to all the stage operators & On Job Training given to all the stage operators with the I Do, We Do and You Do.	25.05.15	Nitin/Manoj	Closed

7.3 Tangible benefits:

1. **Chronic concern of Head Lamp to Fender Uneven reduced to Zero from 143 incidence from the month of July-15 to 20th Oct-15.**
2. **Defect and rework cost of ` 1,52,813/- per annum is saved.**

7.3 Intangible benefits:

1. **Stage Operators Moral Improved.**
2. **Team Work Built up.**
3. **Confidence Boost up.**

7.Check & confirm the results & effects (Cont.....)

Cost Approval by Industrial Engg. Department

Rework cost estimation -Chronic Concern of Head Lamp to Fender Uneven Gap on Lh/Rh - Message (HTML)

FILE MESSAGE

Tue 20/10/15 08:04

AMRUTKAR GOKUL

Rework cost estimation -Chronic Concern of Head Lamp to Fender Uneven Gap on Lh/Rh

To HIRAY NITIN

Dear Nitin,

Pls find the following Rework cost Estimation for Chronic Concern of Head Lamp to Fender Uneven Gap on Lh/Rh.

Description	Qty	Units
Avg Concerns/Month	126	Nos
Rework time in minutes for Rework of one assy	8	Min
Total time Required to Rework time per Month (In Minutes)	1008	Min
Total time Required to Rework time per Month	16.8	Hours
Cost of rework / Hour	758	Rs
Approx. rework cost/ per month	12734.4	Rs
Total Rework Cost / year	**152813**	**Rs**

Thanks

Gokul Amrutkar

AMRUTKAR GOKUL Conversation with AMRUTKAR GOKUL

8. Standardization

8.1 Updation of Document

1. **Fixture History card of Frt End Assy Fixture has updated. Sushil-20.05.2015-Closed**
2. **Fixture History card of Fender Assy & Fender Fitment Fixture has updated. Sushil - 26.05.2015-Closed**
3. **DCP updated for Front End Assy stage & Head lamp Fitment Stage. Nitin/Ganesh -30.05.2015-Closed.**

8.2 Training

OPL Given to all the stage operators & On Job Training given to all the stage operators with the I Do, We Do and You Do. Mr.Ganesh Bendale -25.05.15- Closed

8.3 Additional Audit or Check

Checkpoint is added in IQ check sheet to ensure Head Lamp to Fender uneven Gap Concern – Mr.Ganesh Bendale 10.09.2015-Closed

9. Summarize & Plan Future actions

9.1) Conclusion :

Head Lamp to Fender Uneven Gap Concern on Scorpio BIW has eliminated by implementing the In-hose Actions in Welding & Fitment Fixtures.

9.2) Horizontal Deployment :

- **Check the Possibility of Extending the actions to similar at Tail Lamp to BIW Uneven Gap Concern (21 Dec-15).**

9.3) Lessons Learnt :

Things Gone Wrong : Poor Clamping Unit Design. Inappropriate Welding Assy Fixtures Layout & Lack of proper Interface between BIW geometry & TCF inter Face.

Things Gone Right : 1.We studied & Understand the TCF interface with Welding & Fitment Fixture & implemented the in-house actions.

THANK YOU !!!